REVISION HISTORY			
REV.	DESCRIPTION	DATE	DRAWN BY
1	ORIGINAL PRINT	7/17/2023	J. DOMINIACK

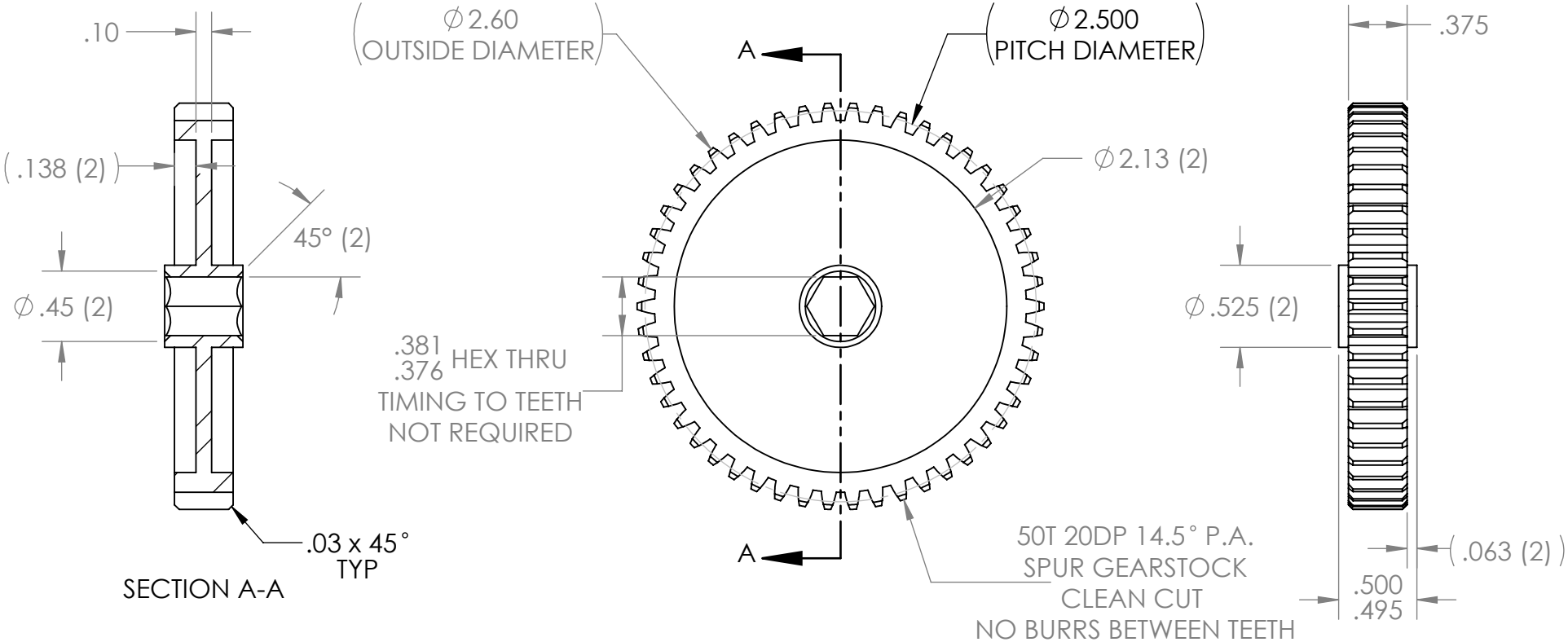

*** SEE CAD FOR ADDITIONAL TOOLPATH INFO***

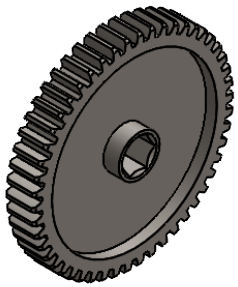

UNLESS OTHERWISE SPECIFIED:		COMMENTS:
DIMENSIONS ARE IN INCHES		DUAL DIMENSIONS ARE IN MILLIMETERS.
TOLERANCES:		BREAK ALL SHARP EDGES
FRACTIONAL	±1/16	
ANGULAR: MACH	±1°	
ANGULAR: BEND	±5°	
ONE PLACE DECIMAL	±0.1	
TWO PLACE DECIMAL	±0.01	
THREE PLACE DECIMAL	±0.005	
FOUR PLACE DECIMAL	±0.0005	
MATERIAL 6061 AL		
FINISH DEBURRED NITUFF ANODIZED		
DO NOT SCALE DRAWING		

	NAME	DATE
CHECKED	NM	7/20/23
ENG APPR.		
MFG APPR.		
Q.A.		

AndyMark

TITLE: 50T 20DP 14.5PA 375IN HEX BORE ALUMINUM GEAR

SIZE	DWG. NO.	REV
A	am-5154	1

SCALE: 1:1 SHEET 1 OF 1

5 4 3 2 1